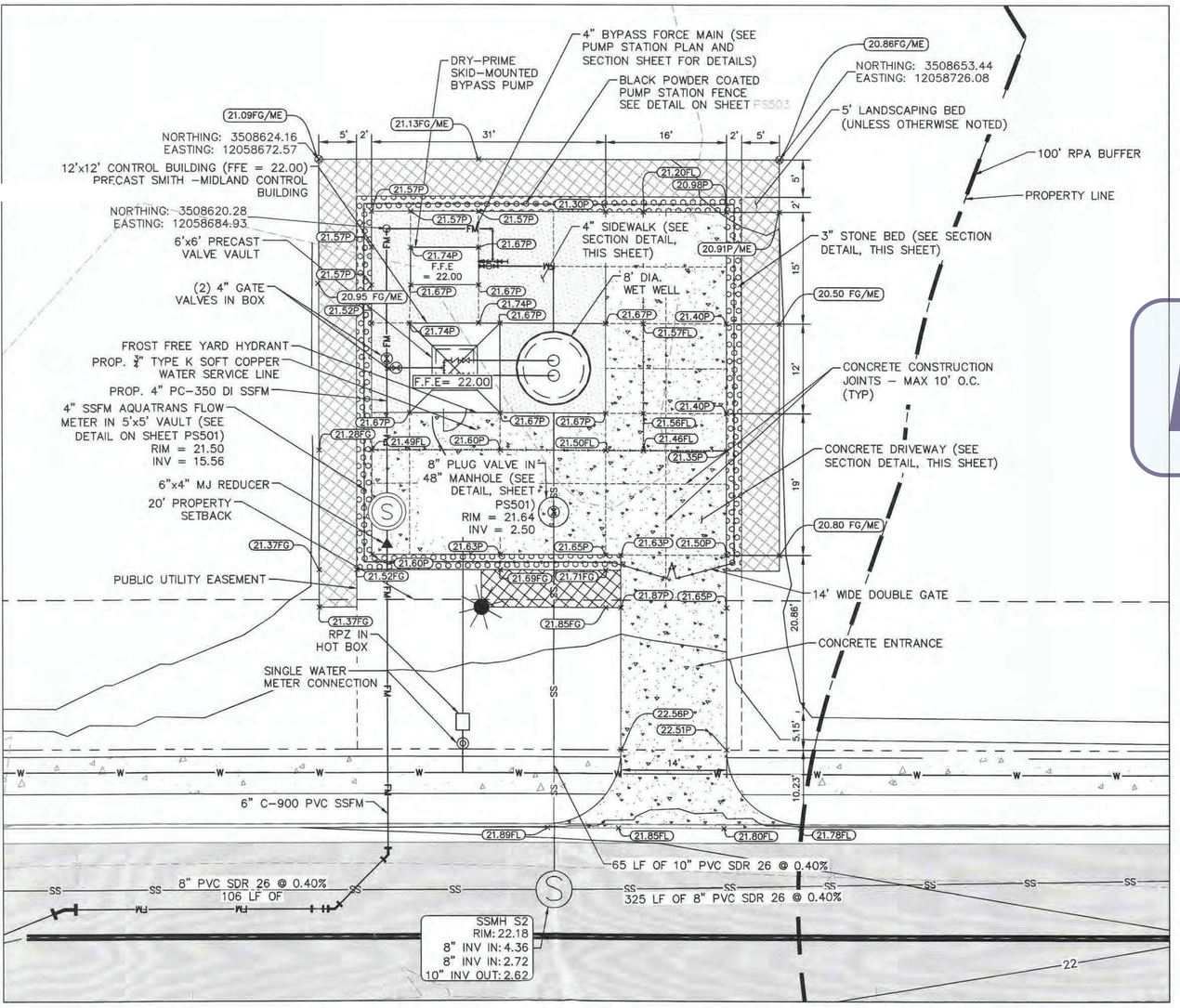

LEGEND:

B	BUILDING
FG	FINISHED GRADE
ME	MATCH EXISTING
P	PAVEMENT
	PLANTING/UNDISTURBED RPA BUFFER (SEE SHEET CL101 FOR PS PLANTING PLAN)
	PUBLIC UTILITY EASEMENT

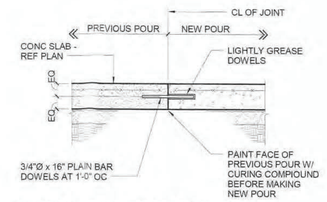

TYPICAL DOWELED KEYED CONSTRUCTION JOINT DETAIL

NTS

NOTE: CONTRACTOR SHALL USE DOWELS TO CONNECT INDEPENDENT CONCRETE POURS PER THE DETAIL PROVIDED.

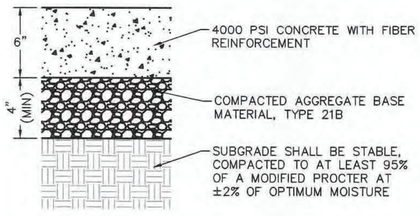

DRIVEWAY SECTION

NOT TO SCALE

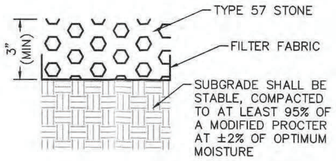

STONE BED

NOT TO SCALE

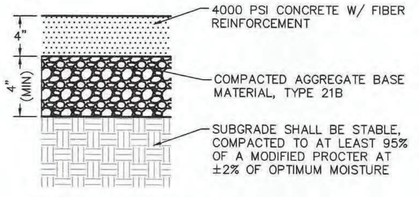

SIDEWALK SECTION

NOT TO SCALE

SURVEY NOTES

1. THE MERIDIAN SOURCE OF THIS TOPOGRAPHIC SURVEY REFERENCE THE VIRGINIA STATE PLANE COORDINATE SYSTEM, SOUTH ZONE. ISLE OF WIGHT SURVEY CONTROL MONUMENTS #14 & #18.
2. ELEVATIONS REFER TO NORTH AMERICAN VERTICAL DATUM 1988.
3. THIS SURVEY WAS PREPARED TO SHOW EXISTING FEATURES AS OF MAY 28, 2020 AND DOES NOT CERTIFY AS TO THE ACCURACY OF PROPOSED OR FUTURE ITEMS WHICH ARE ADDED TO THIS DRAWING.
4. PIPE MATERIAL TYPES ARE DETERMINED BY FIELD OBSERVATIONS TO THE BEST OF OUR ABILITY WITHOUT ACCESSING STRUCTURES. VARIOUS TYPES MAY NOT BE ACCURATE DUE TO THE INACCESSIBILITY AND LOCATION OF PIPES WITHIN THE STRUCTURES.
5. THE SURVEYOR MAKES NO GUARANTEE THAT THE UNDERGROUND UTILITIES SHOWN COMPRISE ALL SUCH UTILITIES IN THE AREA, EITHER IN SERVICE OR ABANDONED. THE SURVEYOR FURTHER DOES NOT WARRANT THAT THE UNDERGROUND UTILITIES SHOWN ARE IN THE EXACT LOCATION INDICATED, ALTHOUGH THE SURVEYOR DOES CERTIFY THAT THEY ARE LOCATED AS ACCURATELY AS POSSIBLE FROM THE INFORMATION AVAILABLE. THE SURVEYOR HAS NOT PHYSICALLY LOCATED THE UNDERGROUND UTILITIES. THE SURVEYOR FURTHER NOTIFIES ALL PARTIES THAT VIRGINIA LAW REQUIRES MISS-UTILITY TO BE CONTACTED PRIOR TO ANY EXCAVATION.
6. THIS FIRM IS NOT RESPONSIBLE FOR THE LOCATION OF ANY STRUCTURE, MANHOLE, VALVE, ETC., HIDDEN OR OBSTRUCTED AT THE TIME THE FIELD SURVEY WAS PERFORMED.
7. THIS SURVEY WAS COMPLETED UNDER THE DIRECT AND RESPONSIBLE CHARGE OF RICHARD A. BARNES, L.S., LICENSE NO. 002730, FROM AN ACTUAL GROUND SURVEY MADE UNDER HIS SUPERVISION AND MEETS MINIMUM ACCURACY STANDARDS UNLESS OTHERWISE NOTED.
8. UNDERGROUND UTILITIES SHOWN HEREON ARE BASED ON FIELD LOCATION OF PAINT MARKINGS BY MISS UTILITY OF VA.
9. WETLAND DELINEATION SHOWN IS FROM LOCATING FLAGS PLACED BY STANTEC INC. A CONFORMATION FROM THE CORPS OF ENGINEERS WAS NOT KNOWN AT TIME OF SURVEY.
10. PLAT REFERENCES: [2015-64-1-3
11. PROPERTY APPEARS TO LIE IN FLOOD ZONES X & AE(8) AS SHOWN ON FEMA FLOOD MAPS 5109JC0158E & 5109JC0159E BOTH DATED DECEMBER 2, 2015.

GENERAL NOTES

1. THIS PUMP STATION DOES NOT LIE WITHIN A 100 YEAR FLOOD PLAIN AS DEFINED BY THE APPROPRIATE FEMA NATIONAL FLOOD INSURANCE PROGRAM FLOOD INSURANCE RATE MAP.
2. THIS PLAN DOES NOT GUARANTEE THE EXISTENCE, NONEXISTENCE, SIZE, TYPE, LOCATION, ALIGNMENT OR DEPTH OF ANY OR ALL UNDERGROUND UTILITIES OR OTHER FACILITIES. WHERE SURFACE FEATURES (MANHOLES, CATCH BASINS, VALVES, ETC.) ARE UNAVAILABLE OR INCONCLUSIVE, INFORMATION SHOWN MAY BE FROM UTILITY OWNERS RECORDS AND/OR ELECTRONIC LINE TRACING, THE RELIABILITY OF WHICH IS UNCERTAIN. THE CONTRACTOR SHALL PERFORM WHATEVER TEST EXCAVATION OR OTHER INVESTIGATION IS NECESSARY TO VERIFY TIE-IN INVERTS, LOCATIONS AND CLEARANCES, AND SHALL REPORT IMMEDIATELY ANY DISCREPANCIES TO KIMLEY-HORN AND ASSOCIATES, INC. AT 213-8600. UTILITY COMPANIES SHALL BE NOTIFIED 48 HOURS IN ADVANCE OF ANY EXCAVATION IN THE PROXIMITY OF THEIR UTILITIES. THE CONTRACTOR SHALL BE RESPONSIBLE FOR REPAIRING AT HIS EXPENSE ANY EXISTING UTILITIES DAMAGED DURING CONSTRUCTION.
3. THE CONTRACTOR SHALL BE REQUIRED TO EXCAVATE BELOW PLAN GRADE ANY MATERIALS WHICH ARE UNSUITABLE FOR FOUNDATIONS, SUB GRADES, PIPE TRENCH BOTTOMS OR OTHER PURPOSES AND BACKFILL THESE AREAS WITH AN APPROVED MATERIAL. THE EXTENT OF UNDERCUTTING AND BACKFILLING SHALL BE DETERMINED BY THE COUNTY OR VDOT AS TO AREAS WITHIN STREET RIGHT-OF-WAY AND THE ENGINEER IN OTHER AREAS. COMPENSATION SHALL BE AS SET FORTH IN THE CONTRACT DOCUMENTS.
4. CONTRACTOR SHALL REPORT IMMEDIATELY TO THE ENGINEER ALL FIELD CONDITIONS ENCOUNTERED WHICH ARE NOT SHOWN ON THE DRAWINGS, AND WHICH WERE NOT REASONABLY ANTICIPATED.
5. THE CONTRACTOR IS RESPONSIBLE FOR THE PROTECTION OF ALL UTILITIES TO REMAIN IN PLACE.
6. THE CONTRACTOR IS RESPONSIBLE TO REMOVE ALL THE REMOVED/DEMOLISHED MATERIAL FROM THE PROJECT SITE AND DISPOSE OF SAME IN A LEGAL MANNER.
7. THE CONTRACT DOCUMENTS FOR THE CONSTRUCTION OF THIS PUMPING STATION ARE COMPRISED OF THE SPECIFICATIONS, THESE DRAWINGS, AND SUCH OTHER GENERAL AND SPECIAL PROVISIONS, PROPOSAL FORMS, CONTRACT AGREEMENT FORMS, ETC. AS THE OWNER AND CONTRACTOR SHALL MUTUALLY AGREE TO. IN THE EVENT OF A CONFLICT BETWEEN THESE DRAWINGS AND THE SPECIFICATIONS, THESE DRAWINGS SHALL GOVERN.
8. THE DEPARTMENT OF PUBLIC UTILITIES, ISLE OF WIGHT, VIRGINIA STANDARDS AND SPECIFICATIONS SHALL APPLY TO THIS WORK WHERE APPLICABLE. WHERE A CONFLICT EXISTS BETWEEN THE STANDARD SPECIFICATIONS AND THESE DRAWINGS AND TECHNICAL SPECIFICATIONS, THE MORE STRINGENT STANDARD SHALL APPLY.
9. NOT UISED
10. PRIOR TO PLACING CONCRETE OR STONE BASE COURSE, ALL FOUNDATION EXCAVATIONS SHALL BE INSPECTED BY THE GEOTECHNICAL ENGINEER TO EXPLORE THE EXTENT OF ANY LOOSE, SOFT OR OTHERWISE UNDESIRABLE MATERIAL AND REPLACE WITH A STONE BASE COURSE MATERIAL AS DIRECTED.
11. FOUNDATIONS FOR THIS STRUCTURE HAVE BEEN DESIGNED WITH A SOIL BEARING CAPACITY OF 2000 POUNDS PER SQUARE FOOT. CONTRACTOR SHALL VERIFY BEARING CAPACITIES BY GEOTECHNICAL INSPECTION.
12. SOIL PROPERTIES ASSUMED FOR STRUCTURAL DESIGN TO BE VERIFIED BY CONTRACTOR, IN THE FORM OF A SIGNED AND SEALED GEOTECHNICAL REPORT. CONTRACTOR TO NOTIFY ENGINEER IF SITE CONDITIONS DIFFER FROM ASSUMED PROPERTIES BELOW PRIOR TO COMPLETING ANY WORK.
    a. MATERIAL: SANDY-CLAY SOILS
    b. UNIT WEIGHT = 120 PCF
    c. FRICTION ANGLE = 30 DEGREES
    d. COHESION = 0 PSF
    e. WATER TABLE ELEVATION = 17.00
14. CONCRETE SHALL BE NORMAL WEIGHT AND SHALL OBTAIN A 28 DAY COMPRESSIVE STRENGTH OF 4000 PSI AND SHALL BE AIR ENTRAINED. MAXIMUM WATER, CEMENT RATIO SHALL BE 0.45.
15. REINFORCING MATERIALS SHALL BE ASTM A615 GRADE 60, DEFORMED BARS.
16. ALL REINFORCING STEEL AND EMBEDDED ITEMS SUCH AS ANCHOR BOLTS AND WELD PLATES SHALL BE ACCURATELY PLACED IN THE POSITIONS INDICATED AND ADEQUATELY TIED AND SUPPORTED BEFORE CONCRETE IS PLACED TO PREVENT DISPLACEMENT BEYOND PERMITTED TOLERANCES.
17. MINIMUM CONCRETE COVER SHALL BE IN ACCORDANCE WITH ACI-318 UNLESS OTHERWISE SHOWN ON THE DRAWINGS.
18. ALL FASTENERS, HARDWARE, AND SUPPORT PIPING EXPOSED TO THE WET WELL GAS SHALL BE 316 STAINLESS STEEL.
19. THE CONTRACTOR SHALL VERIFY THE REQUIREMENTS OF OTHER TRADES AS TO SLEEVES, CHASES, HANGERS, INSERTS, ANCHOR, HOLES, ETC. TO BE PLACED OR SET IN THE STRUCTURAL WORK.
20. THE ISLE OF WIGHT COUNTY DEPARTMENT OF PUBLIC UTILITIES WILL:
    a. OWN AND OPERATE THE SEWERAGE PUMPING STATION, FORCE MAIN AND GRAVITY SEWER SYSTEM.
    b. INSPECT CONSTRUCTION OF THE PUMPING STATION, INCLUDING INSTALLATION OF ALL EQUIPMENT AND INSTALLATION OF THE FORCE MAIN.
21. THE CONTRACTOR SHALL BE RESPONSIBLE FOR OBTAINING ALL PERMITS FOR CONSTRUCTION OF THE PUMPING STATION, PUMP STATION SITE WORK, AND INSTALLATION OF THE FORCE MAIN. ISLE OF WIGHT COUNTY SHALL OBTAIN VDOT PERMIT. THE CONTRACTOR IS TO PROVIDE FOR CONNECTION TO VIRGINIA POWER AND PAY ALL COSTS ASSOCIATED WITH SAID SERVICE CONNECTION. THE CONTRACTOR IS TO COORDINATE WITH THE COUNTY TO TRANSFER THE POWER INTO THE COUNTY'S NAME UPON COMPLETION AND ACCEPTANCE OF THE FACILITY.
22. THE PUMPING STATION SITE WILL BE DEDICATED TO THE COUNTY OF ISLE OF WIGHT.
23. ALL EXTERIOR WALLS BELOW GRADE SHALL BE COATED WITH BITUMASTIC COATING. THIS INCLUDES THE PRECAST WET WELL, VALVE VAULT, MONOLITHIC SLAB, AND FLOW METER VAULT.
24. WET WELL LINER SHALL BE TENEMEC PERMASHIELD SERIES 434 AND 435 AND OTHER BELOW GRADE WALLS SHALL BE LINED WITH THE BITUMASTIC COATING.
25. DEVELOPER SHALL SUPPLY 4" GODWIN SKID MOUNTED MODEL HL80M DRI-PRIME HUSH-PAC PUMP.
26. EXPOSED PIPING SHALL BE INSULATED WITH ALUMINUM ROLL JACKETING.
27. THE CONTRACTOR SHALL CONFORM TO THE "OVERHEAD HIGH VOLTAGE ACT" (EFFECTIVE JULY 1, 1981) AND SHALL CONTACT THE NECESSARY AUTHORITIES PRIOR TO THE START OF CONSTRUCTION.
28. ALL PROPOSED UTILITIES SHALL BE PLACED BENEATH THE SURFACE OF THE GROUND UNLESS EXEMPTED BY ONE OF THE FOLLOWING:
    a. EQUIPMENT SUCH AS ELECTRIC DISTRIBUTION TRANSFORMERS, TRANSMISSION 33KV AND ABOVE, SWITCH GEAR, METER PEDESTALS AND TELEPHONE PEDESTALS, WHICH ARE NORMALLY INSTALLED ABOVE GROUND AND IN ACCORDANCE WITH ACCEPTED UTILITY PRACTICES FOR UNDERGROUND DISTRIBUTION SYSTEMS MAY BE SO INSTALLED;
    b. METERS, SERVICE CONNECTIONS AND SIMILAR EQUIPMENT NORMALLY ATTACHED TO THE OUTSIDE WALL OF THE PREMISES IT SERVES MAY CONTINUE TO BE SO INSTALLED;
    c. TEMPORARY OVERHEAD FACILITIES REQUIRED FOR CONSTRUCTION PURPOSES WILL BE PERMITTED;
    d. ALL IMPROVEMENTS HEREIN REQUIRED SHALL BE IN ACCORDANCE WITH ACCEPTED STANDARDS OF UTILITY PRACTICE FOR UNDERGROUND CONSTRUCTION."
28. AN 18"x24" EMERGENCY CONTACT SIGN SHALL BE PLACED ON THE DRIVEWAY FENCE GATE. THE SIGN SHALL READ:

    IN CASE OF EMERGENCY, PLEASE CONTACT THE ISLE OF WIGHT DEPARTMENT OF PUBLIC UTILITES.
    (757) 365-6319 MONDAY-FRIDAY 8:30am-5:00pm
    (757) 357-2151 NIGHTS/WEEKEND
29. ALL BURIED VALVES ARE TO HAVE VALVE BOXES. SEE SHEET CU-503 FOR VALVE SETTING DETAIL.
30. MANUFACTURER SHALL PROVIDE A 5 YEAR WARRANTY TO THE COUNTY ON PUMPS AND CONTROLS IN LIEU OF PROVIDING BACKUP PUMP.
31. ALL FORCE MAIN JOINTS SHALL BE RESTRAINED JOINT.
32. PUMP STATION SITE WORK WILL END AT RIGHT OF WAY.
33. CONTRACTOR SHALL INCLUDE CONTROL JOINTS WITHIN SIDEWALK AREA.

INFORMATION ONLY

ARC FLASH

1. PERFORM A SHORT CIRCUIT / EQUIPMENT EVALUATION, TIME CURRENT COORDINATION STUDY, AND ARC FLASH ANALYSIS STUDY PER NFPA AND 70E. SUBMIT (3) HARD COPIES AND (1) ELECTRONIC COPY OF THE COMPLETE ARC ANALYSIS REPORT TO INCLUDE ARC FLASH LABELS, HAZARD CATEGORIES AND RECOMMENDED PPE.
2. THE LIMITS OF THE STUDY SHALL BEGIN AT THE UTILITY PRIMARY SOURCE OF CONNECTION AND END AT (INCLUDING BUT NOT LIMITED TO) ALL THREE PHASE PANEL BOARDS, FUSED SWITCHES, MOTOR STARTERS AND SERVICEABLE ENCLOSURES/EQUIPMENT CONTAINING EXPOSED LIVE PARTS. STANDBY POWER GENERATORS AND ASSOCIATED EQUIPMENT SHALL ALSO BE INCLUDED IN THIS STUDY.
3. FURNISH AND INSTALL ARC FLASH WARNING LABELS ON ALL NEW AND EXISTING ELECTRICAL EQUIPMENT PER REQUIRING ARC FLASH WARNING LABELS NFPA70 AND 70E.
4. PROVIDE ONE SET OF PERSONNEL PROTECTIVE EQUIPMENT (PPE) TO INCLUDE SAFETY CLASSES, HARD HAT, INSULATING MAT, ECT. MINIMUM RATING OF PPE SHALL BE 25 CAL/CM2, SIZE AS SPECIFIED BY THE COUNTY.

OPERATION AND MAINTENANCE MANUAL

1. SUBMIT THREE COPIES OF OPERATION AND MAINTENANCE (O&M) MANUAL BOUND IN LOOSE-LEAF BINDERS FOR REVIEW BY ENGINEER.
2. AS A MINIMUM, THE O&M MANUAL SHALL INCLUDE THE FOLLOWING:
    2.1. APPROVED SHOP DRAWINGS WITH MODEL NUMBERS FOR THE FOLLOWING
        2.1.A. DISCONNECT SWITCHES
        2.1.B. WIRE AND CABLES
        2.1.C. CONDUIT WIREWAYS
        2.1.D. FLOW METER, LEVEL TRANSMITTER, PRESSURE TRANSDUCER, FLOAT SWITCHES, LIMIT SWITCHES
        2.1.E. DUPLEX PUMP CONTROL PANEL
    2.2. ALL WIRING AND SCHEMATIC AS-BUILT DIAGRAMS
    2.3. DOCUMENTATION OF ALL WARRANTIES, EXTENDED WARRANTIES, SERVICE AGREEMENTS, ECT.
    2.4. ALL TEST REPORTS
    2.5. MANUALS AND SPECIFICATIONS SHALL BE FURNISHED WHICH PROVIDE FULL AND COMPLETE COVERAGE OF THE FOLLOWING SUBJECTS:
        2.5.A. OPERATIONAL REQUIREMENTS: THIS DOCUMENT SHALL DESCRIBE, IN CONCISE TERMS, ALL THE FUNCTIONAL AND OPERATIONAL REQUIREMENTS FOR THE SYSTEM.
        2.5.B. MAINTENANCE: DOCUMENTATION OF ALL USER-PERFORMED MAINTENANCE ON ALL SYSTEM COMPONENTS INCLUDING INSPECTION, PERIODIC PREVENTIVE MAINTENANCE, FAULT DIAGNOSIS, AND REPAIR OR REPLACEMENT OF DEFECTIVE UNITS. THIS SHALL INCLUDE CALIBRATION, MAINTENANCE, AND REPAIR OF ALL SENSORS AND CONTROLS, PLUS DIAGNOSIS AND REPAIR AND REPLACEMENT OF ALL SYSTEM HARDWARE.
        2.5.C. SCHEDULE: INCLUDE SCHEDULE OF ALL PREVENTIVE MAINTENANCE TO BE PROVIDED.
    2.6. THE MANUAL'S IDENTIFICATION SHALL BE INSCRIBED ON THE COVER
    2.7. THE NAMES AND ADDRESSES, AND LOCAL REPRESENTATIVES FOR EACH ITEM PF EQUIPMENT AND EACH SYSTEM.
    2.8. THE MANUALS SHALL HAVE A TABLE OF CONTENTS AND BE ASSEMBLED TO CONFORM TO THE PROJECT MANUAL ADDITIONALLY EACH MANUAL SHALL CONTAIN A COMPREHENSIVE INDEX OF ALL MANUALS SUBMITTED IN ACCORDANCE WITH THIS PARAGRAPH.

PUMP STATION CONSTRUCTION SEQUENCE

CONSTRUCTION OF THE PROJECT SHALL BE SEQUENCED TO LIMIT THE AMOUNT OF LAND DISTURBANCE AT ANY GIVEN TIME. CONSTRUCTION SHALL PROCEED AS FOLLOWS.

1. NOTIFY COUNTY PRIOR TO CONSTRUCTION TO REQUEST A PRE-CONSTRUCTION MEETING.
2. CONTRACTOR TO OBTAIN NECESSARY PERMITS PRIOR TO THE BEGINNING OF CONSTRUCTION.
3. NOTIFY MISS UTILITY PRIOR TO THE START OF ANY CONSTRUCTION AND HAVE ALL UTILITIES MARKED.
4. INSTALL PERIMETER CONTROLS INCLUDING CONSTRUCTION ENTRANCE AND SILT FENCE.
5. CLEAR SITE AND STOCKPILE TOPSOIL
6. PREPARE PUMP STATION BUILDING PAD AND ROUGH GRADE SITE.
7. INSTALL ALL UNDERGROUND UTILITIES AND PUMP STATION WET WELL/ DRY WELL.
8. PLACE BASE STONE FOR DRIVEWAY.
9. COMPLETE PUMP STATION BUILDING AND APPURTENANCES.
10. REDRESS BASE STONE AND PAVE DRIVEWAY.
11. REPAIR ANY INADVERTENT EROSION AND REMOVE ANY INADVERTENT SEDIMENTATION.
12. TEST AND STARTUP PUMP STATION AND GAIN APPROVAL FROM THE DESIGN ENGINEER AND THE COUNTY.

INFORMATION ONLY

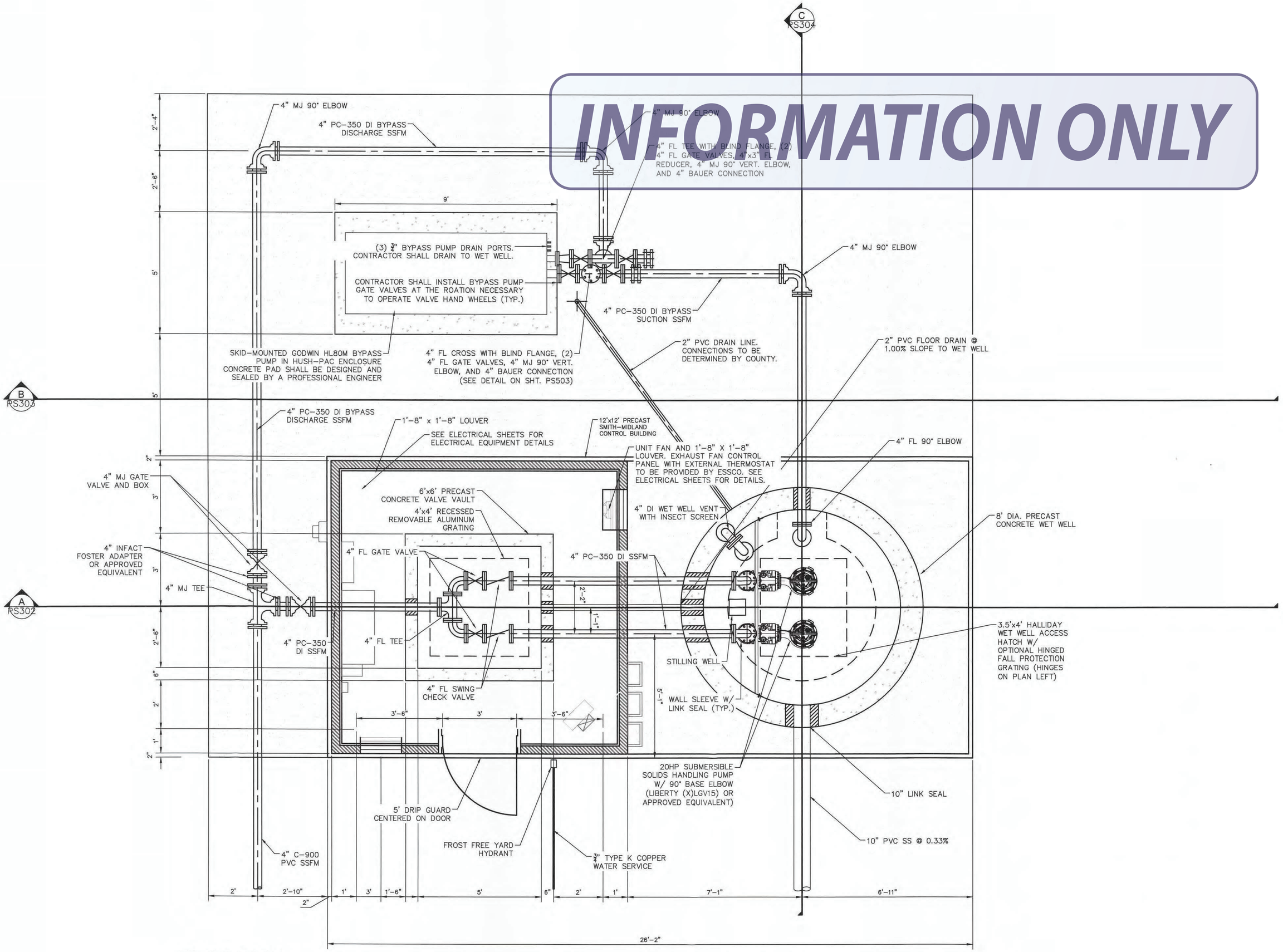

NOTE: CONTRACTOR SHALL GRADE AWAY FROM CONTROL BUILDING DOOR.

CAST-IN-PLACE CONCRETE NOTES:

1. CONCRETE SHALL BE IN ACCORDANCE WITH AMERICAN CONCRETE INSTITUTE (ACI) 301 AND 318.
2. CONCRETE SHALL BE NORMAL WEIGHT AND SHALL OBTAIN A 28-DAY COMPRESSIVE STRENGTH OF 3500 PSI.
3. REINFORCING MATERIALS SHALL BE AS FOLLOWS:
   3.a. REINFORCING BARS – ASTM A615, GRADE 60, DEFORMED
   3.b. WELDED REINFORCING BARS – ASTM A706, GRADE 60
4. CONCRETE COVER SHALL BE AS FOLLOWS UNLESS NOTED OTHERWISE ON THE DRAWINGS:
   4.a. CONCRETE DEPOSITED DIRECTLY AGAINST EARTH – 3"
   4.b. CONCRETE EXPOSED TO EARTH OR WEATHER – 2"
5. LAP CONTINUOUS REINFORCING STEEL 57*BAR DIAMETER UNLESS NOTED OTHERWISE

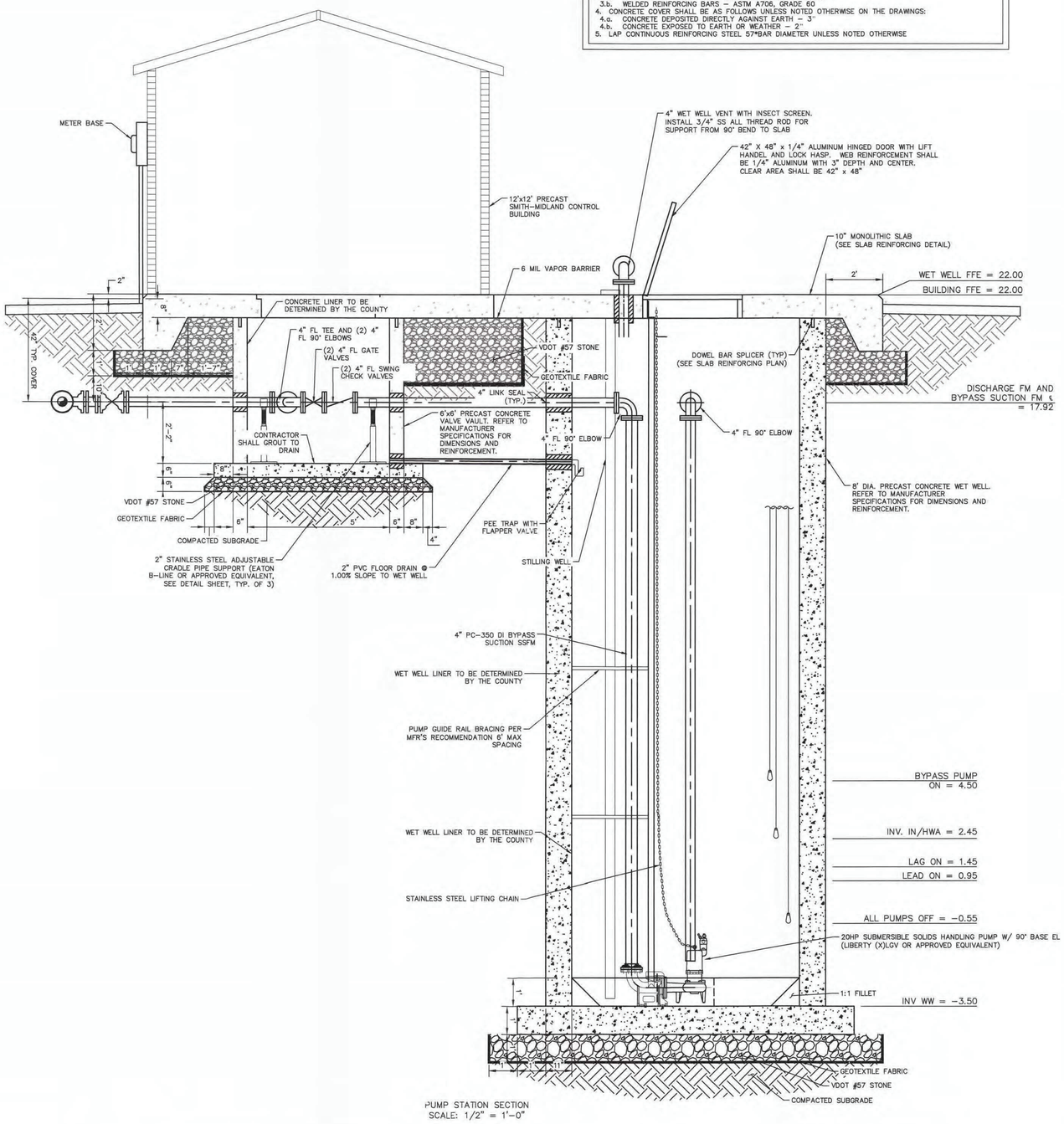

PUMP STATION SECTION
SCALE: 1/2" = 1'-0"

INFORMATION ONLY

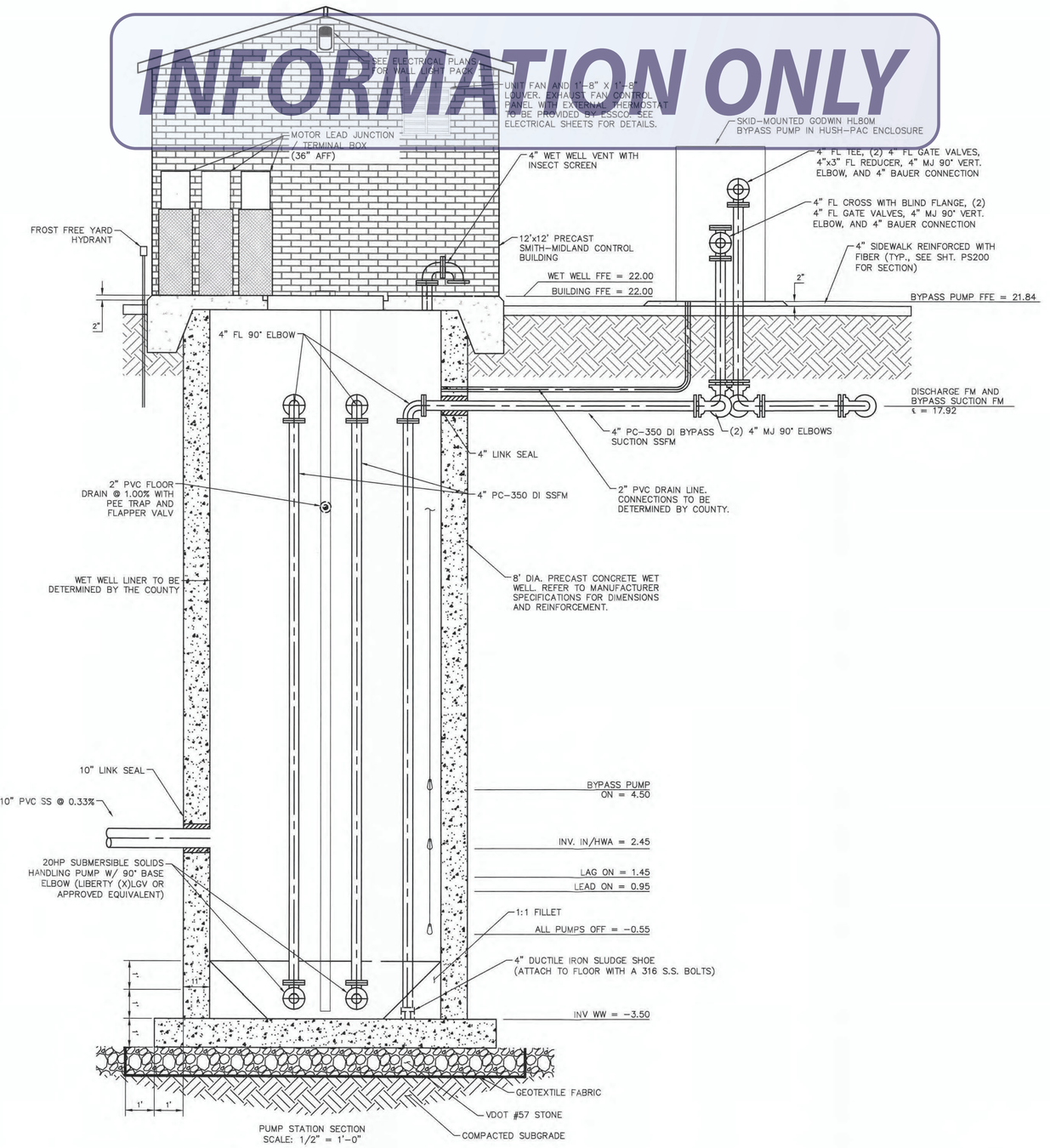

PUMP STATION SECTION
SCALE: 1/2" = 1'-0"

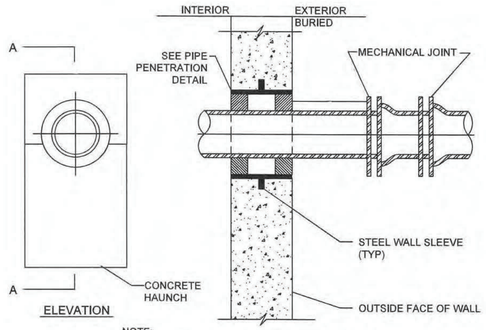

NOTE:
TYPICAL AT ALL DUCTILE IRON WALL PIPE PENETRATIONS ABOVE BASE SLAB

NOTES:
1. PROVIDE AT 4-INCH HEADER PIPING.
2. PROVIDE NON-SHRINK GROUT BELOW PIPE.

DUCTILE IRON WALL PENETRATION DETAIL
NOT TO SCALE

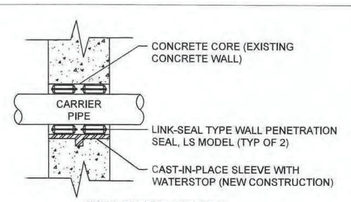

WALL SLEEVE AND SEAL

NOTES:
1. FOR OPENINGS IN NEW CONCRETE USE CAST-IN-PLACE SLEEVES. CORE NEW WALL OPENINGS IN EXISTING CONCRETE WITH DIAMOND BIT CONCRETE SAW PROVIDING CLEAN SMOOTH SURFACE FOR SEALING PENETRATION.
2. OPENINGS SHALL BE SQUARE TO WALL AND PIPE CENTERLINE TO FACILITATE SEALING THE ANNULAR SPACE WITH LINK SEALS.
3. COORDINATE SELECTED LINK SEAL TO WALL OPENING SIZE TO ACCOMMODATE CARRIER PIPE AND LINK SEAL.
4. COAT INTERIOR SURFACE OF NEW WALL PENETRATION WITH MINIMUM OF 4 MILS OF EP4 EPOXY, IN ACCORDANCE WITH MANUFACTURER'S INSTRUCTIONS.
5. ALL BOLTS SHALL BE STAINLESS STEEL AND INSTALLED AND TIGHTENED FROM INSIDE THE STATION.

PIPE PENETRATION DETAIL
NOT TO SCALE

STILLING WELL

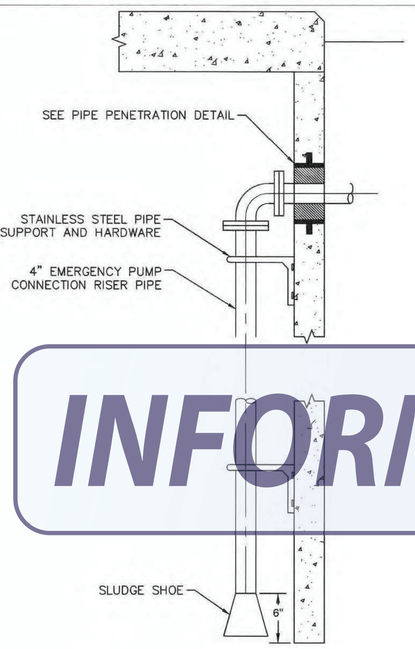

EMERGENCY PUMP CONNECTION - WET WELL SECTION
NOT TO SCALE

INFORMATION ONLY

CG-9D

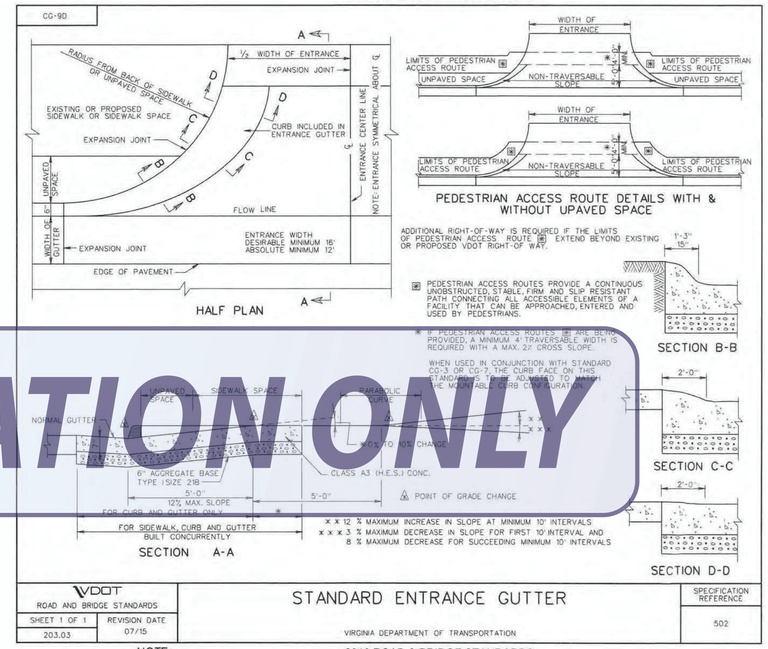

VDOT ROAD AND BRIDGE STANDARDS	STANDARD ENTRANCE GUTTER	SPECIFICATION REFERENCE
SHEET 1 OF 1	REVISION DATE 07/15	502
203.03	VIRGINIA DEPARTMENT OF TRANSPORTATION	

NOTE:

2016 ROAD & BRIDGE STANDARDS

1. DRIVEWAY AGGREGATE BASE AND CONCRETE SHALL BE IN ACCORDANCE WITH SECTION A–A OF THE VDOT CG–9D DETAIL.

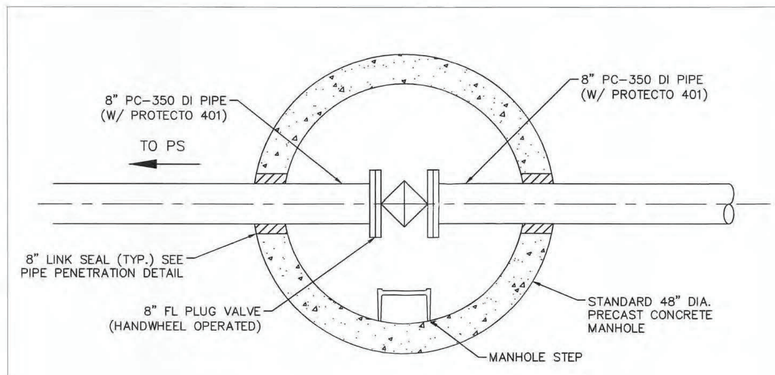

PLUG VALVE MANHOLE PLAN
NOT TO SCALE

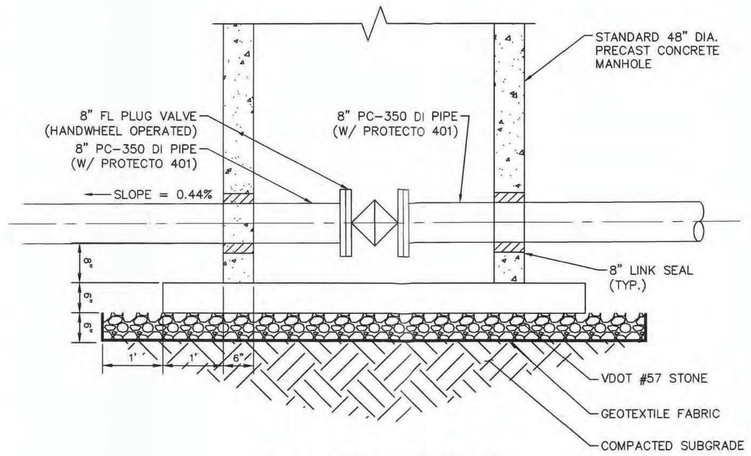

PLUG VALVE MANHOLE SECTION
NOT TO SCALE

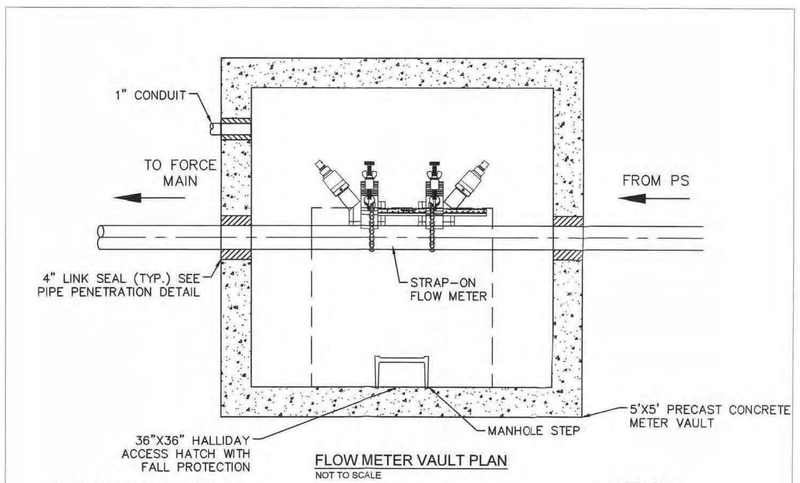

FLOW METER VAULT PLAN
NOT TO SCALE

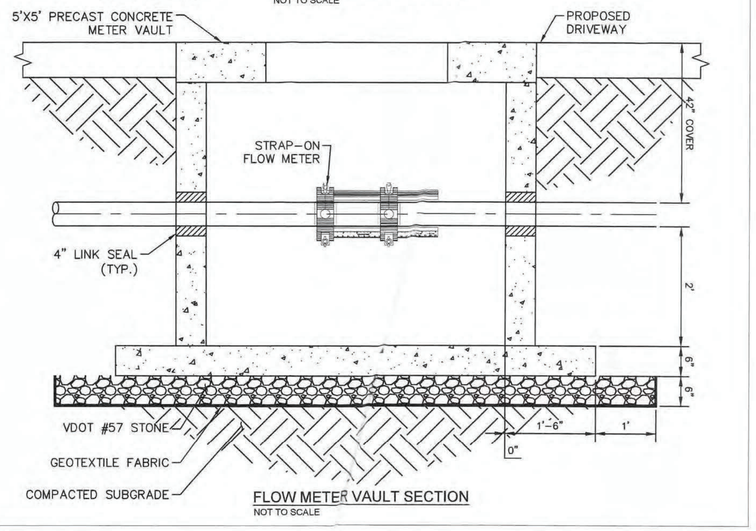

FLOW METER VAULT SECTION
NOT TO SCALE

NOTES:
1. FLOW METER SHALL BE AQUATRANS AT868 FLOW METER WITH C–RS–401 OR APPROVED EQUIVALENT. TRANSDUCER SHALL BE PANAMETRICS C–CS UTRASONIC FLOW TRANSDUCER OR APPROVED EQUIVALENT.
2. COORDINATE ELECTRICAL CONDUIT WITH ELECTRICAL DRAWINGS.

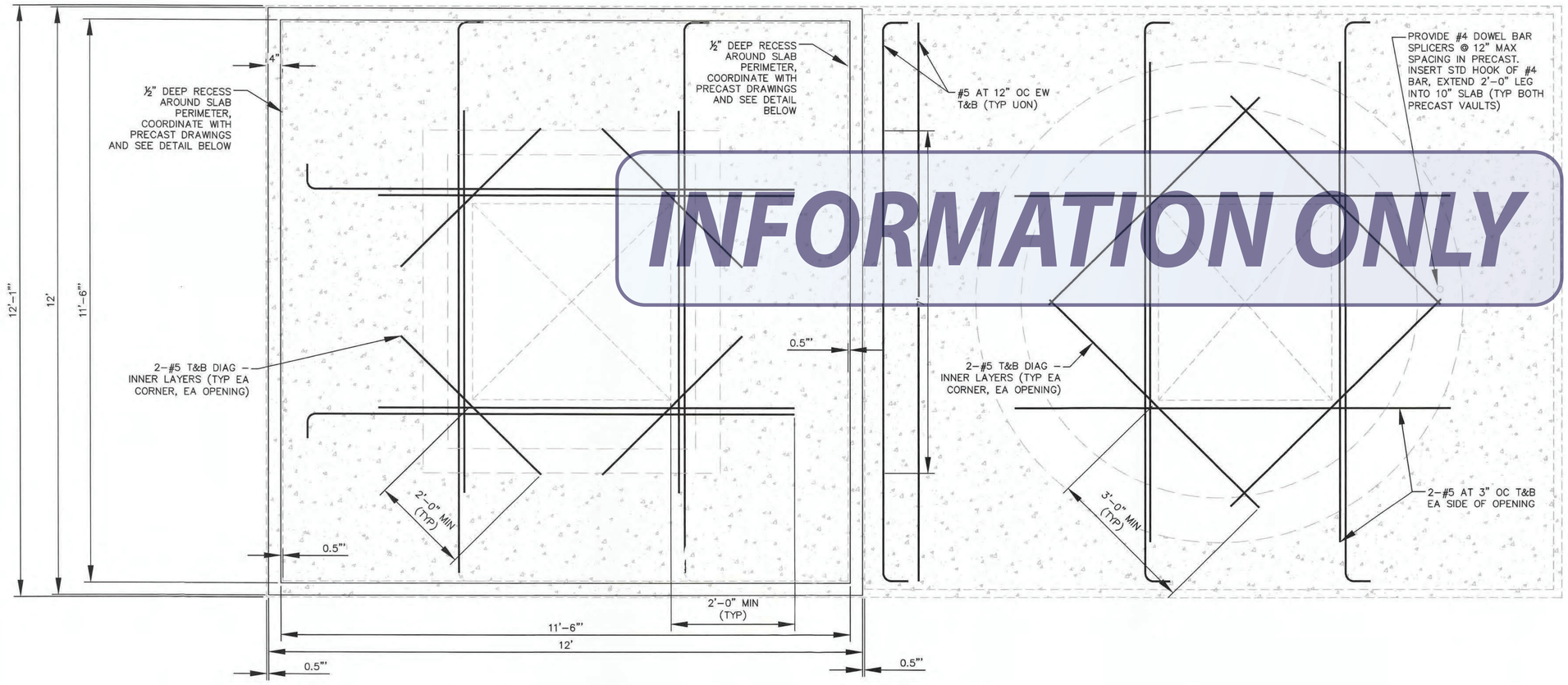

INFORMATION ONLY

10" MONOLITHIC SLAB REINFORCEMENT DETAIL
N.T.S.

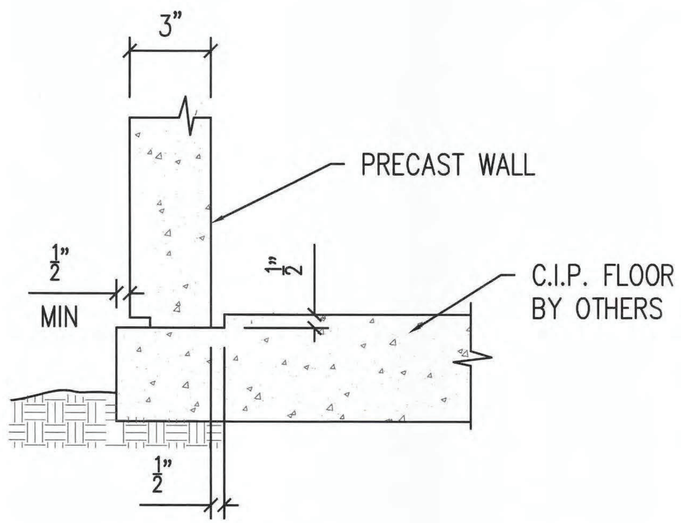

SLAB PERIMETER DETAIL
N.T.S.

FAN SCHEDULE

MARK	CFM	SP (IN WG)	RPM	HP–VOLT	TYPE	GREENHECK CAT. NO. OR EQUAL	AREA	CONTROL	REMARKS
EF–1	250	.250	NOTE 1	1/4–120V	PROPELLER	SE1–12–426–VG	CONTROL RM	T'STAT/SW	NOTES 1, 2, 3

NOTES;

1. MANUFACTURER SHALL SET RPM AS REQUIRED FOR FAN CAPACITY.
2. PROVIDE FANS WITH GRAVITY TYPE BACK DRAFT DAMPER.
3. PROVIDE FACTORY FURNISHED COMBINATION STARTER/DISCONNECT WITH, GREENHECK MODEL MS–1P OR EQUAL. PROVIDE THERMOSTAT CONTROL WITH OCCUPANCY SENSOR SWITCH OVERRIDE.

LIGHTING FIXTURE SCHEDULE

TYPE	MANUFACTURER	CATALOG NO.	LAMPS	VOLT	MOUNTING	REMARKS
A	LITHONIA LIGHTING	VAP–6000LM–FST–MD–MVOLT–GZ10–50K–80CRI–DL–STSL	LED 6000LM	120	CEILING	NOTES 1, 4
A1	LITHONIA LIGHTING	VAP–6000LM–FST–MD–MVOLT–GZ10–50K–80CRI–DL–STSL–BSL722C	LED 6000LM	120	CEILING	NOTES 1, 4
B	LITHONIA	WGEILED–P2–40K–80CRI–VW–MVOLT–PE–DDBX	LED 2000LM	120	7'–6" AFG	NOTES 2, 3

NOTES:
ALL FIXTURES TO CONFORM TO ARTICLE 410 OF THE NEC.

1. DAMP LABEL, COLD TEMPERATURE RATED.
2. VANDAL RESISTANT SCREWS, WET LOCATION, COLD TEMPERATURE RATED, WIRE GUARD, PHOTO CELL, SWITCH OVERRIDE.
3. FINISH SHALL BE BRONZE TO MATCH EXTERIOR DOOR.
4. SURFACE MOUNT ON CEILING.

LOUVER SCHEDULE

MARK	SIZE (WxH)	THICK	ACOUSTICS	ALUMINUM BACK DRAFT DAMPER	GREENHECK CAT. NO. OR EQUAL	BASE DISTANCE (AFF MOTOR ROOM)	REMARK
L–1	20"x20"	2"	NO	YES	ESD–202	24"	NOTES 1, 2
L–2	20"x20"	2"	NO	YES	ESD–202	72"	NOTES 1, 2

NOTES;

1. FINISH SHALL BE BRONZE BAKED ON FACTORY FINISH TO MATCH EXTERIOR DOOR. LOUVERS SHALL BE FURNISHED WITH 3/4" ALUMINUM BIRD SCREENS.
2. FURNISH GRAVITY TYPE ALUMINUM BACK DRAFT DAMPERS.

UNIT HEATER SCHEDULE

MARK	CAPACITY	HEAT ELEMENT		CFM	VOLTS/ϕ	REZNOR MODEL NO. OR EQUAL	REMARKS
	KW	QTY	KW				
UH–1	7.5	3	2.5	700	208V–3ϕ	EGHB	NOTES 1, 2

NOTES:

1. PROVIDE SINGLE STAGE WALL MOUNTED THERMOSTATS WITH ADJUSTABLE SETTING.
2. PROVIDE FACTORY FURNISHED MOUNTING BRACKETS AS REQUIRED. INSTALL WITH MINIMUM DISTANCE OF 12" FROM CEILING TO TOP OF UNIT, 6" FROM WALLS.

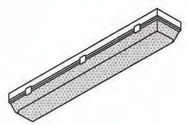

A LED VAPOR–TITE FIXTURE. SINGLE PIECE HOUSING, UV–STABILIZED, IMPACT–RESISTANT, INJECTION–MOLDED FROSTED POLYCARBONATE HOUSING WITH CONTINUOUS POURED–IN–PLACE, CLOSED CELL GASKET, 20–GAUGE STEEL CHANNEL AND CHANNEL COVER. CAPTIVE, TAMPER–RESISTANT, STAINLESS STEEL LATCHES. UV–STABILIZED, INJECTION–MOLDED, IMPACT–RESISTANT, FROSTED POLYCARBONATE LENS. INTEGRAL 6KV/3KA SURGE PROTECTION. L85 AT 60,000 HOURS, 6000 LUMEN OUTPUT, 5000K, 80CRI.
A1 SAME AS FIXTURE "A" EXCEPT WITH EMERGENCY EMERGENCY BATTERY BACK–UP.

LIGHT FIXTURE DETAIL
SCALE: NONE



LED WALL PACK, 1096 LUMEN, 4000K, 120 VOLT, PHOTOCELL CONTROL, WET LOCATION, –40°C MIN. AMBIENT OPERATING TEMP. PROVIDE MOTION SENSOR AUTO ON/OFF CONTROL, MANUAL SWITCH OVERRIDE.

LIGHT FIXTURE
SCALE: NONE

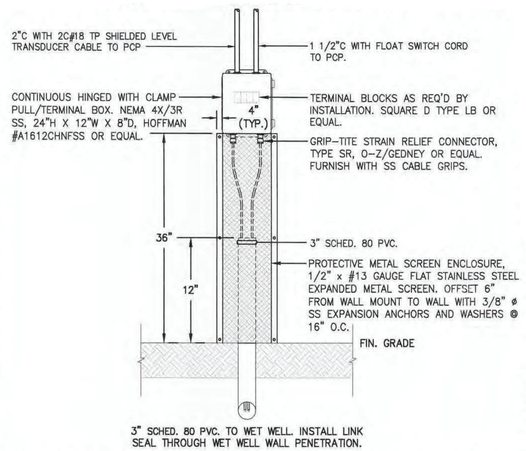

TRANSDUCER/FLOAT SWITCH JUNCTION/TERMINAL BOX
SCALE: NONE

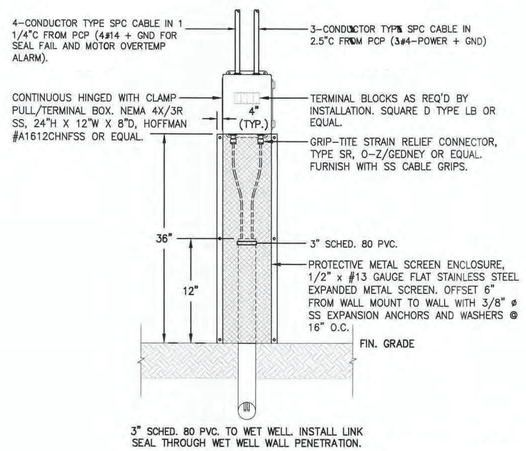

MOTOR LEAD JUNCTION/TERMINAL BOX (TYP. OF 2)
SCALE: NONE

ELECTRICAL GENERAL NOTES

1. ALL MOTOR CONTROL CIRCUITS AND WIRING SHALL CONFORM TO ARTICLE 430 OF THE NEC AND AS RECOMMENDED BY MANUFACTURER'S INSTALLATION INSTRUCTIONS.
2. ALL PANELBOARDS AND SAFETY SWITCHES USED AS SERVICE ENTRANCE EQUIPMENT ARE TO BE LABELED WITH A SERVICE ENTRANCE TYPE UL LABEL, FACTORY INSTALLED.
3. ALL WIRING SHALL BE RUN IN CONDUIT. REFER TO ELECTRICAL SPECIFICATIONS.
4. ALL EXTERIOR CONDUIT SHALL BE PVC COATED RIGID STEEL.
5. ALL BELOW GRADE AND WET WELL CONDUIT SHALL BE SCHEDULE 80 PVC.
6. ALL CONDUITS, EXCEPT THOSE RUN IN SLAB, ARE TO BE RUN PARALLEL AND AT RIGHT ANGLE TO BUILDING LINES (NO CONDUIT IN WALLS).
7. ALL CONDUITS ENTERING FLOOR SLAB SHALL HAVE A CONCRETE CURB AT POINT OF FLOOR SLAB ENTRANCE.
8. WORKING SPACE AROUND ELECTRICAL EQUIPMENT IS TO BE PROVIDED AS PER ARTICLE 110–26 OF THE NEC.
9. ALL PANELS, SWITCHES, AND CIRCUITS ARE TO BE MARKED AS PER ARTICLE 110–21 OF THE NEC.
10. A GROUND WIRE IS TO BE RUN TO ALL MOTORS, RECEPTACLES, FIXTURES, OUTLETS, AND OTHER ELECTRICAL DEVICES. ALL EQUIPMENT IS TO BE GROUNDED IN ACCORDANCE WITH THE NEC.
11. ALL CONDUCTORS SHALL BE COPPER STRANDED, 90°C, THHN/THWN.
12. PROVIDE LOCK–OUT DEVICE FOR MOTOR POWER CIRCUIT BREAKER.
13. SHARED OR COMMON NEUTRAL CONDUCTORS SHALL NOT BE PERMITTED.
14. ALL CONTROL LOGIC TO BE ACCOMPLISHED THROUGH THE PLC.
15. THE CONTRACTOR SHALL OBTAIN ALL PERMITS. THE CONTRACTOR TO SUBMIT A SCHEMATIC DRAWING DETAILING THE ELECTRICAL WORK TO BE PERFORMED.
16. POWER CIRCUITS AND CONTROL (AC AND DC) CIRCUITS SHALL BE RUN IN SEPARATE CONDUITS, NO EXCEPTION. LOW VOLTAGE (0–10VOLTS) AND/OR LOW AMPERAGE (0–20MA, 4–20MA) SHALL NOT BE RUN IN ANY CONDUIT THAT HAS WIRES EXCEEDING AFOREMENTIONED VOLTAGE AND/OR AMPERAGE.
17. ALL WIRING AND EQUIPMENT IN WET WELL SHALL BE EXPLOSION PROOF, CLASS 1, DIVISION 1 TO CONFORM TO ARTICLE 500 OF THE NEC.
18. CONTRACTOR SHALL BE RESPONSIBLE FOR COORDINATING WITH DOMINION ENERGY (DE) FOR ALL SERVICE REQUIREMENTS. OWNER SHALL BE RESPONSIBLE FOR ALL COST ASSOCIATED WITH DE SERVICE INSTALLATION.
19. POWER AND CONTROL CIRCUIT CONDUITS SHALL BE COLOR CODED AS FOLLOWS: POWER – RED, CONTROL – ORANGE.

INFORMATION ONLY

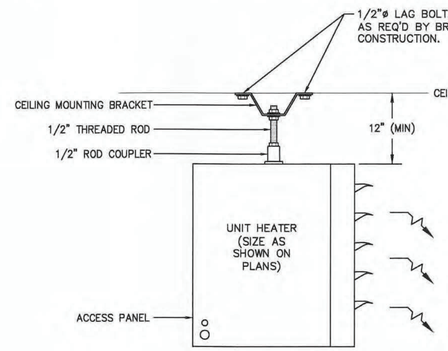

UNIT HEATER UH-1 MOUNTING DETAIL
SCALE: NONE

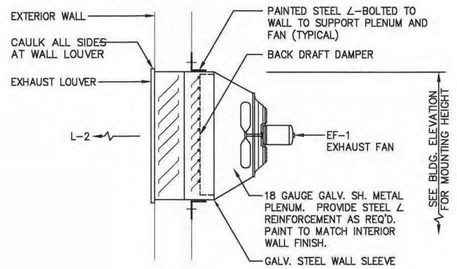

EF-1 MOUNTING DETAIL
SCALE: NONE

ELECTRICAL LEGEND

- --------CONDUIT BELOW GRADE OR UNDER SLAB
- ————EXPOSED CONDUIT
- DUPLEX RECEPTACLE OUTLET, 42" AFF
- MAGNETIC DOOR SWITCH INTRUSION ALARM
- (M) PUMP MOTOR
- (F) EXHAUST FAN
- (H) UNIT HEATER
- FLUORESCENT FIXTURE
- S SWITCH (SUFFIX "a", "b", AND "c" DESIGNATES FIXTURE CONTROLLED, "f" FAN SWITCH, "T" THERMAL SWITCH)
- (J) JUNCTION BOX
- (T) THERMOSTAT
- DISCONNECT SWITCH WITH LOCK–OUT HANDLE, SIZE AS INDICATED ON PLANS
- COMBINATION STARTER/DISCONNECT SWITCH WITH LOCK–OUT HANDLE, SIZE AS INDICATED ON PLANS
- ELECTRICAL PANELS
- (1) T ELECTRICAL WORK NOTE IDENTIFICATION
- (FS) FLOAT SWITCH
- (LT) LEVEL TRANSDUCER
- FM FLOW METER
- SF PUMP SEAL FAIL ALARM PROBE
- OT MOTOR OVER–TEMPERATURE ALARM SWITCH
- LS CHECK VALVE LIMIT SWITCH
- PT DISCHARGE LINE PRESSURE TRANSDUCER
- J IN–GROUND PULL BOX
- PUSH–BUTTON STATION
- GFI/WP DUPLEX RECEPTACLE OUTLET, 42" AFF
- ROUND EXHAUST DUCT
- BRACKET MOUNTED FIXTURE
- A FIXTURE TYPE DESIGNATION
- * CROUSE–HINDS EYS SEAL–OFF
- GENERATOR RECEPTACLE
- OS OCCUPANCY SENSOR – DUAL TECHNOLOGY
- (S) SMOKE DETECTOR

ABBREVIATIONS

AFF	ABOVE FINISH FLOOR
ATS	AUTOMATIC TRANSFER SWITCH
CB	CIRCUIT BREAKER
DE	DOMINION ENERGY
EXP	EXPLOSION PROOF
FM	FLOW METER
FVNR	FULL VOLTAGE, NON–REVERSING STARTER
GFI	GROUND FAULT INTERRUPTER
GND	GROUNDING CONDUCTOR
HMI	HUMAN MACHINE INTERFACE
HOA	HAND–OFF–AUTO SELECTOR SWITCH
IC	INPUT CONTACTOR
LR	LINE REACTOR
MCP	MOTOR CONTROL PANEL
MTS	MANUAL TRANSFER SWITCH
NEC	NATIONAL ELECTRICAL CODE
MO	MOTOR OPERATED DAMPER
OC	OUTPUT CONTACTOR
PCP	PUMP CONTROL PANEL
PLC	PROGRAMMABLE LOGIC CONTROLLER
PMP	PUMP
RGSC	RIGID GALVANIZED STEEL CONDUIT
RTU	REMOTE TERMINAL UNIT
SS	STAINLESS STEEL
TP	TWISTED PAIR WIRE
TVSS	TRANSIENT VOLTAGE SUPPRESSOR
UON	UNLESS OTHERWISE NOTED
VFD	VARIABLE FREQUENCY DRIVE
WP	WEATHERPROOF
XDUCER	TRANSDUCER

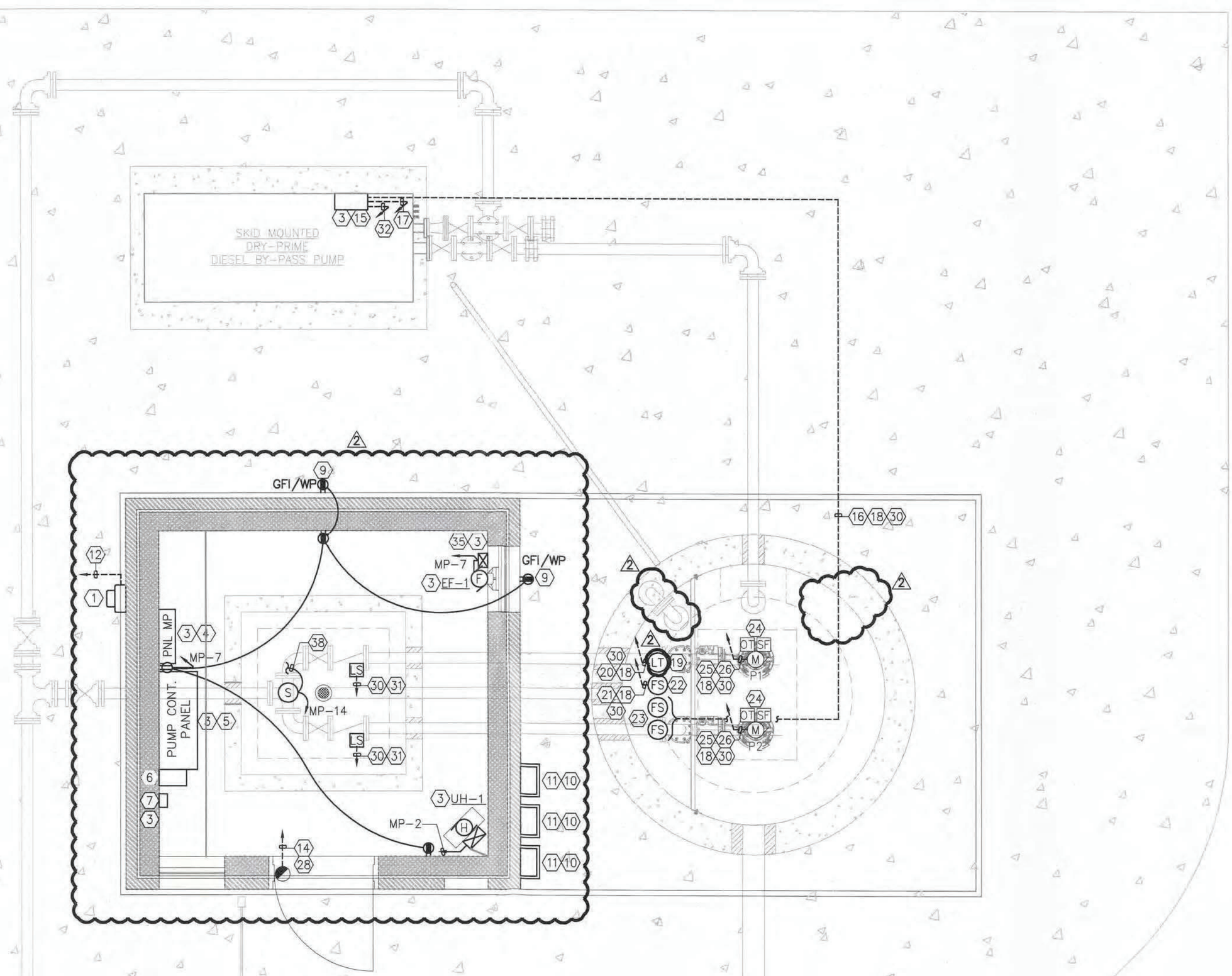

NORTH

ELECTRICAL POWER AND CONTROL PLAN

SCALE: 3/8"=1'-0"

INFORMATION ONLY

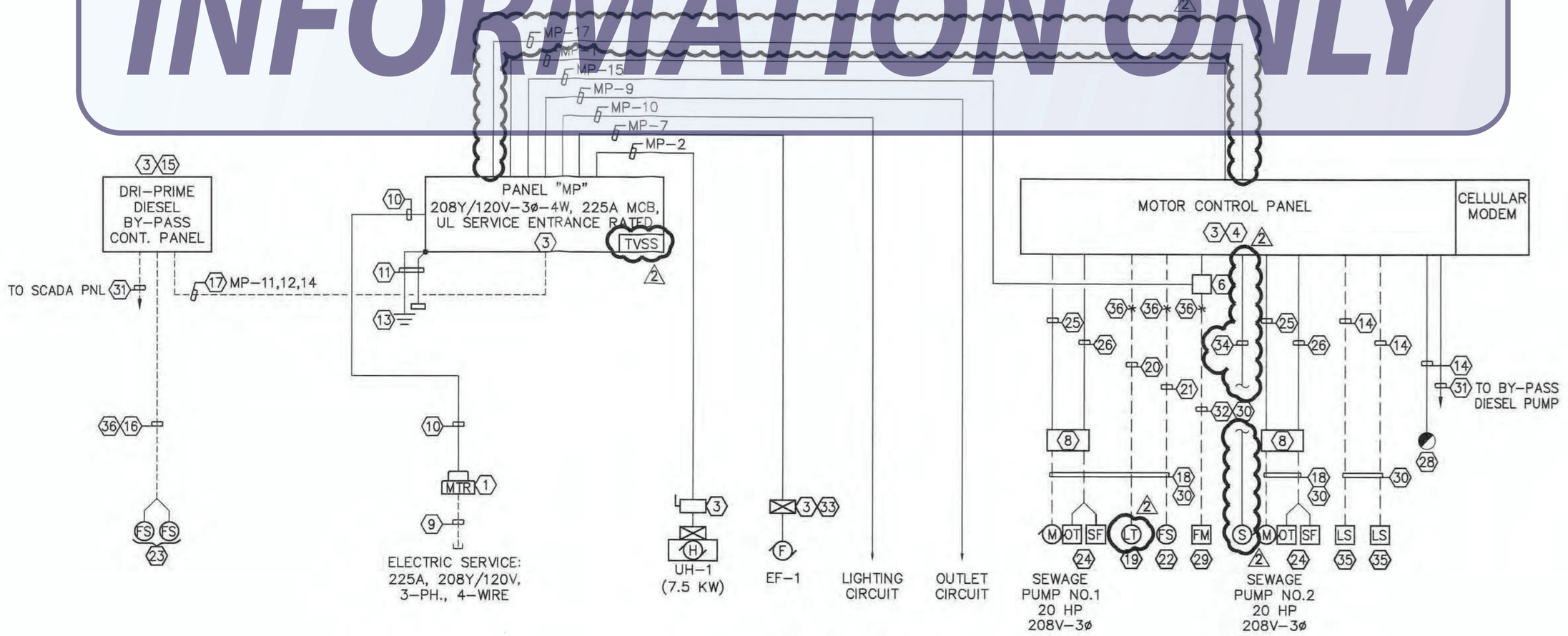

ONE-LINE DIAGRAM

SCALE: NONE

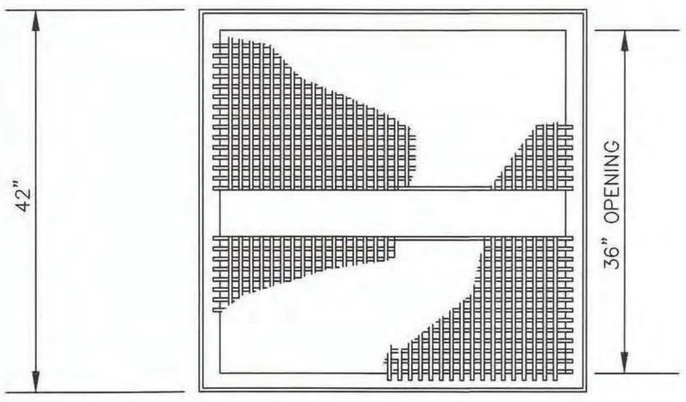

IKG ALUM. GRATING
TYPE "BS" SIZE 10, BANDED

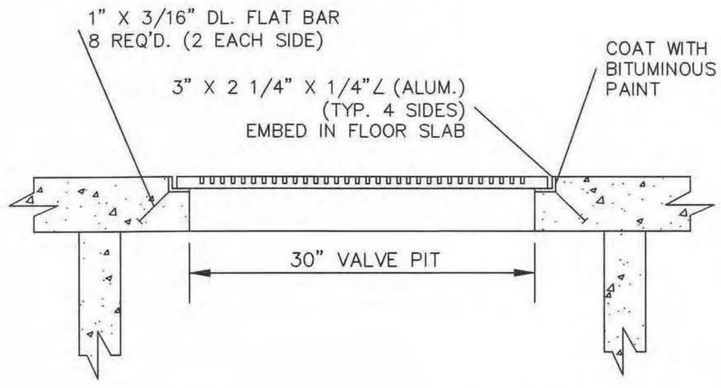

VALVE PIT GRATE DETAIL

NOT TO SCALE

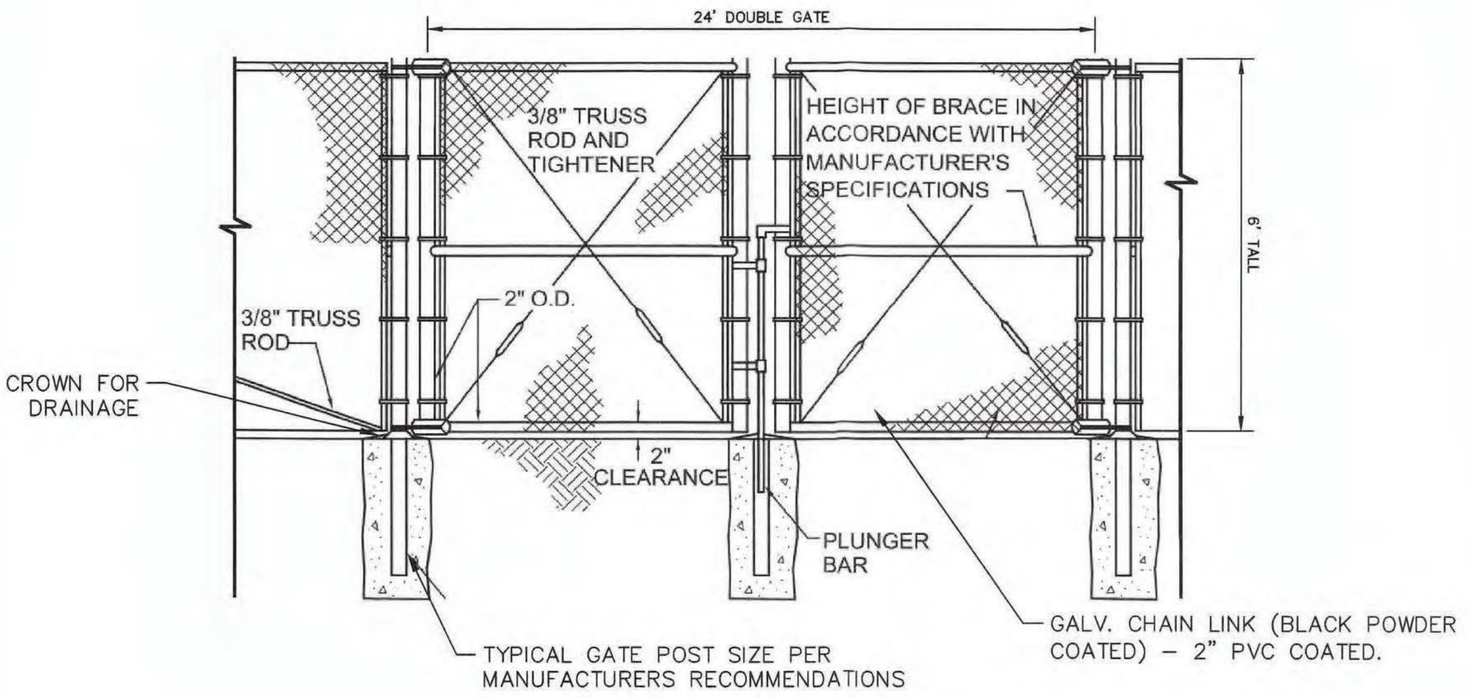

GATE DETAIL

NOT TO SCALE

INFORMATION ONLY

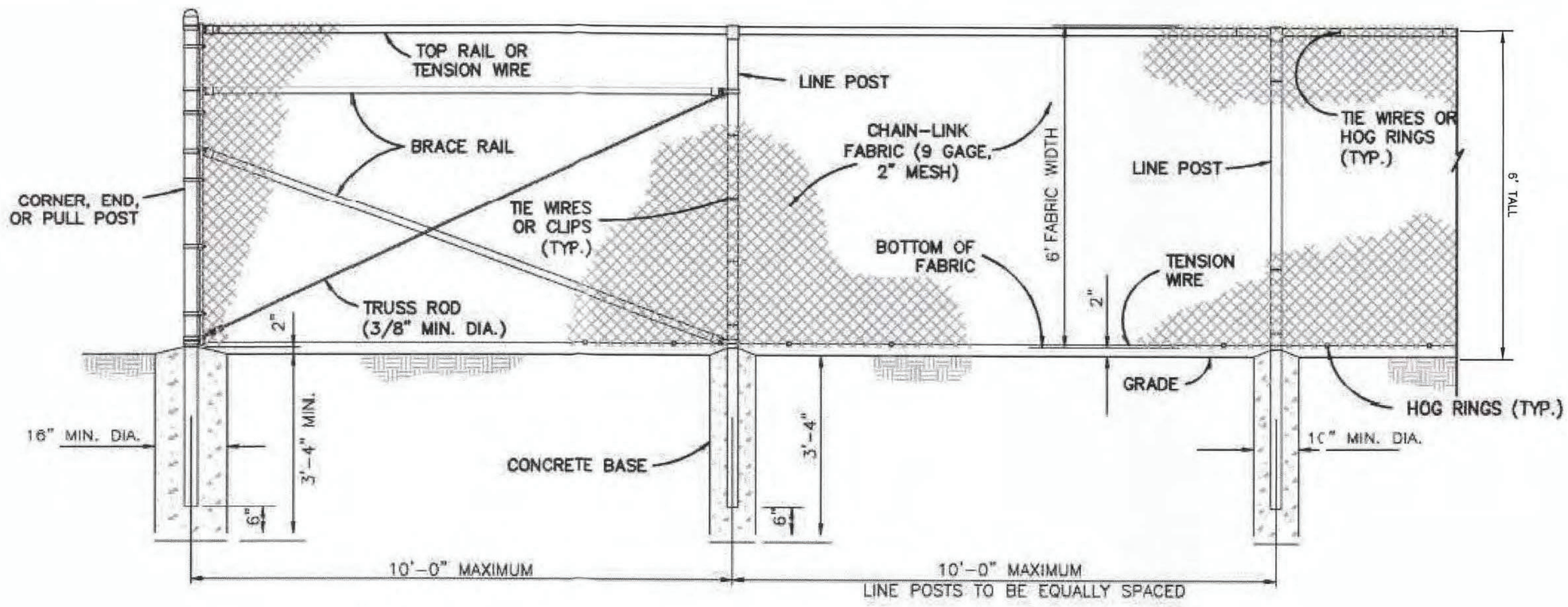

NOTES:

1. CONTRACTOR TO PROVIDE ACTUATORS PER OWNERS SPECIFICATIONS FOR TRUCK ENTRANCE GATES
2. ALL FENCE FABRIC PVC SHALL BE COATED. GATE, POSTS, AND HARDWARE BLACK POWDER COATED
3. KNOX LOCKS WILL BE PROVIDED AT TRUCK ENTRANCE GATES
4. PROVIDE SHOP DRAWINGS WITH ENGINEER'S STAMP FOR FENCES, GATES, AND FOUNDATIONS
5. FABRIC SHALL BE TIED TO TOP AND BOTTOM OF FRAME WITH 11 GAGE WIRE (MIN.)
6. ALL FOOTINGS SHALL BE CLASS A3 CONCRETE
7. FENCE SHALL BE 6' TALL

CHAIN-LINK SECURITY FENCE DETAIL

NOT TO SCALE